Observing Mercury :

from Galileo to the stereo camera on the BepiColombo mission

G. Cremonese[1], V. Da Deppo[2], G. Naletto[3], E. Martellato[4], S. Debei[3] and C. Barbieri[5]

(1) INAF – Osservatorio Astronomico di Padova, Italy; (2) CNR-INFM Luxor, Padova, Italy; (3) Dep. of Information Engeneering, University of Padova, Italy; (4) Cisas "G.Colombo", University of Padova, Italy; (5) Dep.Astronomy, University of Padova, Italy.
(gabriele.cremonese@oapd.inaf.it)

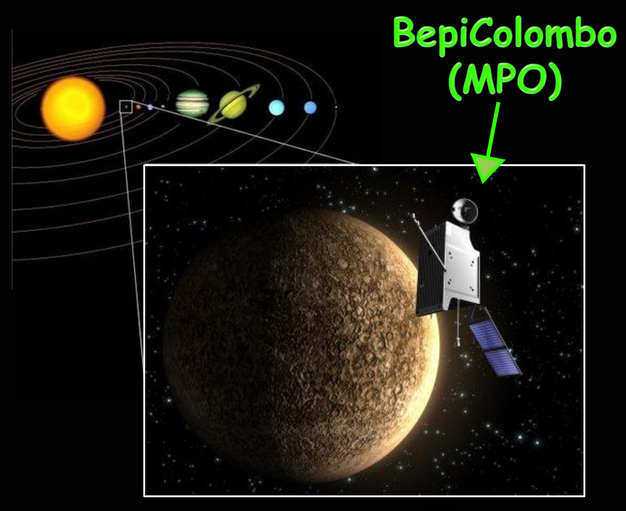

Abstract

After having observed the planets from his house in Padova using his telescope, in January 1611 Galileo wrote to Giuliano de Medici that *Venus is moving around the Sun as Mercury*.
Forty years ago, Giuseppe Colombo, professor of Celestial Mechanics in Padova, made a decisive step to clarify the rotational period of Mercury. Today, scientists and engineers of the Astronomical Observatory of Padova and of the University of Padova, reunited in the Center for Space Studies and Activities (CISAS) named after Giuseppe Colombo, are busy to realize a stereo camera (STC) that will be on board the European (ESA) and Japanese (JAXA) space mission BepiColombo, devoted to the observation and exploration of the innermost planet.
This paper will describe the stereo camera, which is one of the channels of the SIMBIO-SYS instrument, aiming to produce the global mapping of the surface with 3D images.

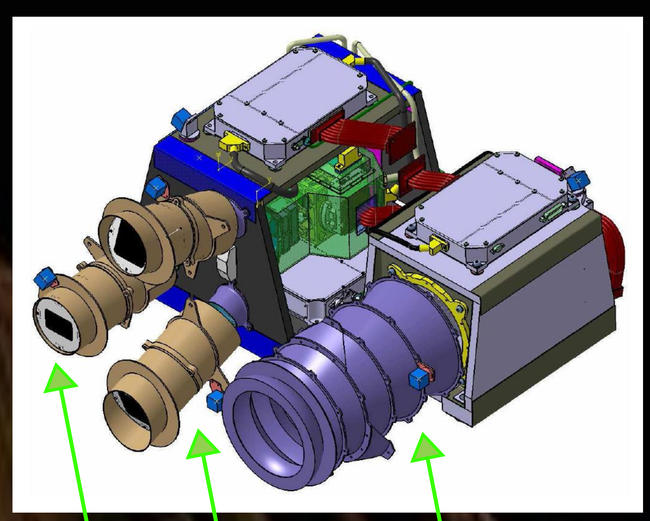

General Scientific Objectives

S I M B I O S Y

Surface

In order to analyse the geological characteristics of Mercury's surface, global (with moderate ground resolution) and local (with higher ground resolution) mapping and three-dimensional information of the surface is needed. In particular, the SIMBIO-SYS instrument will:

- map the entire surface of the planet with a pixel scale lower than 110m;
- characterise the main features of the surface, identify craters, scarps, troughs, lava flows at a pixel size of 5 m (at periherm);
- correlate the observed morphology with surface composition with 100 m resolution and spectral sampling of 6.25 nm;
- generate the global Digital Terrain Model, in order to map the global height distribution of the planet's surface to a vertical accuracy of about 84 m (at the periherm on the equator).

Composition

In order to investigate the chemical composition of Mercury's surface, the mineralogical and elemental composition needs to be globally mapped. In particular, the SIMBIO-SYS instrument will:

- map the entire surface and correlate surface composition and surface features to a scale better than 500 m, comparable with the regolith mixing length which is ~500 m;
- measure global abundances of key minerals to an accuracy better than 10%;
- identify the spatial distribution of mineral species on the surface of Mercury at high spatial and high spectral resolution;
- identify different mineralogical species and their abundances with a spectral sampling of better than 10 nm and an accuracy better than 10%;
- search and identify signatures of unexpected species to better than 10% confidence level.

Geophysics

In order to investigate the structure of Mercury's interior, the determination of the orbital parameters is needed. In particular, the SIMBIO-SYS instrument will provide data to measure:

- the obliquity
- the amplitude of the libration

STC Optical Design

The design of the camera has been driven not only by the scientific requirements but also by the aim of saving mass and power. In this attempt an optical solution with common detector and optical elements has been studied for the two channels. The design has been kept as short and compact as possible, with the need of having the possibility to baffle the two channels to cope with straylight problems due to the common optics choice.
The desired 50 m/px scale factor at periherm is achieved with the 90 mm system effective focal length, considering the choice of a 10 µm pixel size SiPIN CMOS as detector. This kind of detector is particularly useful both in terms of radiation hardness, given the hostile Mercury environment, and for the capability of snapshot image acquisition, allowing very short exposure times of about 1 ms for STC.
The system consists of a modified Schmidt telescope plus a couple of rhomboid prisms positioned in front of the objective. In that solution, the classical Schmidt correcting plate positioned in the center of the curvature of the spherical mirror has been substituted with a correcting doublet positioned about at half distance, in this way the volume is reduced of about a factor of two with respect to the classical solution.
All the optical elements, except the rhomboid prisms and the aperture stops (AS), are common to both channels. Common optics, together with the rhomboid prisms are not sensitive to the tilt, make the system free of co-registration error between the channels. Moreover, given the clear separation between the optical path of the two channels, an *ad hoc* baffling system is realized.

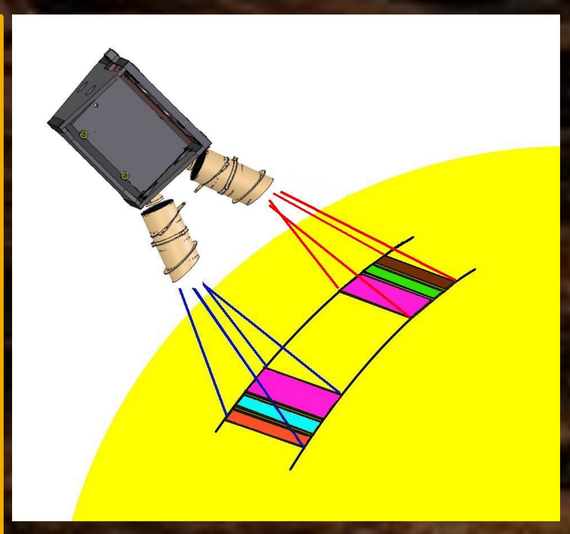

Parameter	Value
Scale factor	50 m/px at periherm
Swath	38 km at periherm
Stereoscopic properties	±20° stereo angle with respect to nadir both images on the same detector
Vertical accuracy	80 m
EE	> 70% inside 1 pixel
MTF	> 60% at Nyquist frequency
Wavelength coverage	410-930 nm (5 filters)
Filters	Panchromatic (700 ± 100 nm) 420 ± 10 nm 550 ± 10 nm 750 ± 10 nm 920 ± 10 nm

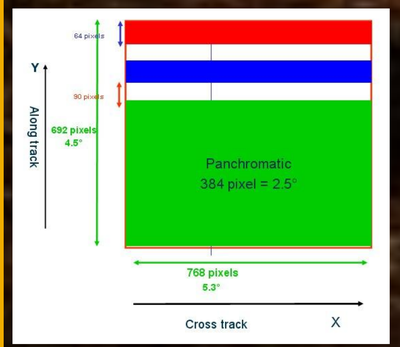

The stereo camera for the BepiColombo mission is based on a completely new optical design and acquisition technique, as the push-frame, instead of the push-broom techniques used by HRSC on board the Mars Express mission and the terrestrial satellites SPOT. It is not possible to say which is the best as STC still have to fly to get the first images, but we think we may achieve good results reducing the number of images to mosaic and having larger single images to find the matching points for the stereo reconstruction.
The global FoV of each channel is 5.3° x 4.5°, subdivided in 3 strips, one for each filter, covering 3 quasi-contiguous strip on Mercury surface; at periherm, on the equator, each strip corresponds to an area of about 38 x 19 km^2 for the panchromatic filter and of about 38 x 3 km^2 for the color ones.

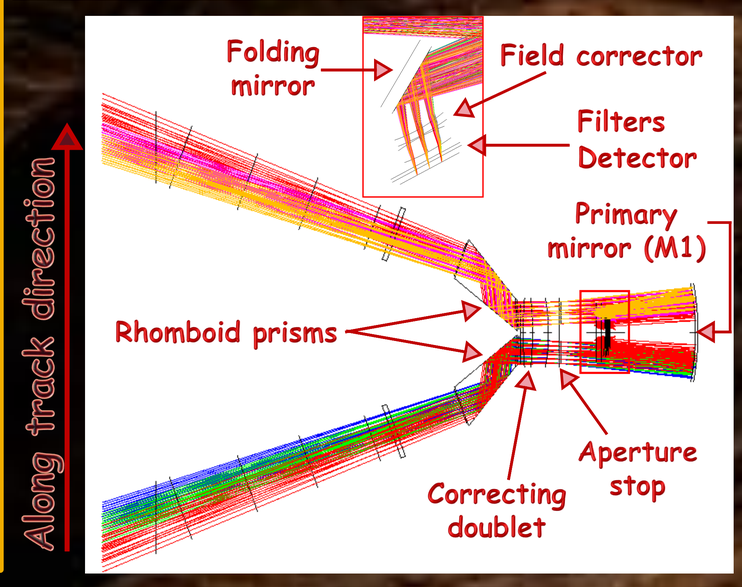

Parameter	Characteristic
Optical concept	**Catadioptric**: modified Schmidt telescope with rhomboid prisms and field corrector
Stereo solution (concept)	2 identical optical sub-channels; detector and most of the optical elements common to the two sub-channels
Focal length (on-axis)	90 mm
Pupil size (diameter)	15 mm
Focal ratio	*f*/6
Mean image scale	23 arcsec/px (111 µrad/px)
FoV (cross track)	5.3°
FoV (along track)	2.4° panchromatic 0.4° color filters
Detector	Si_PIN (format: 2048 × 2048; 10 µm squared pixel) 14 bits dynamic range